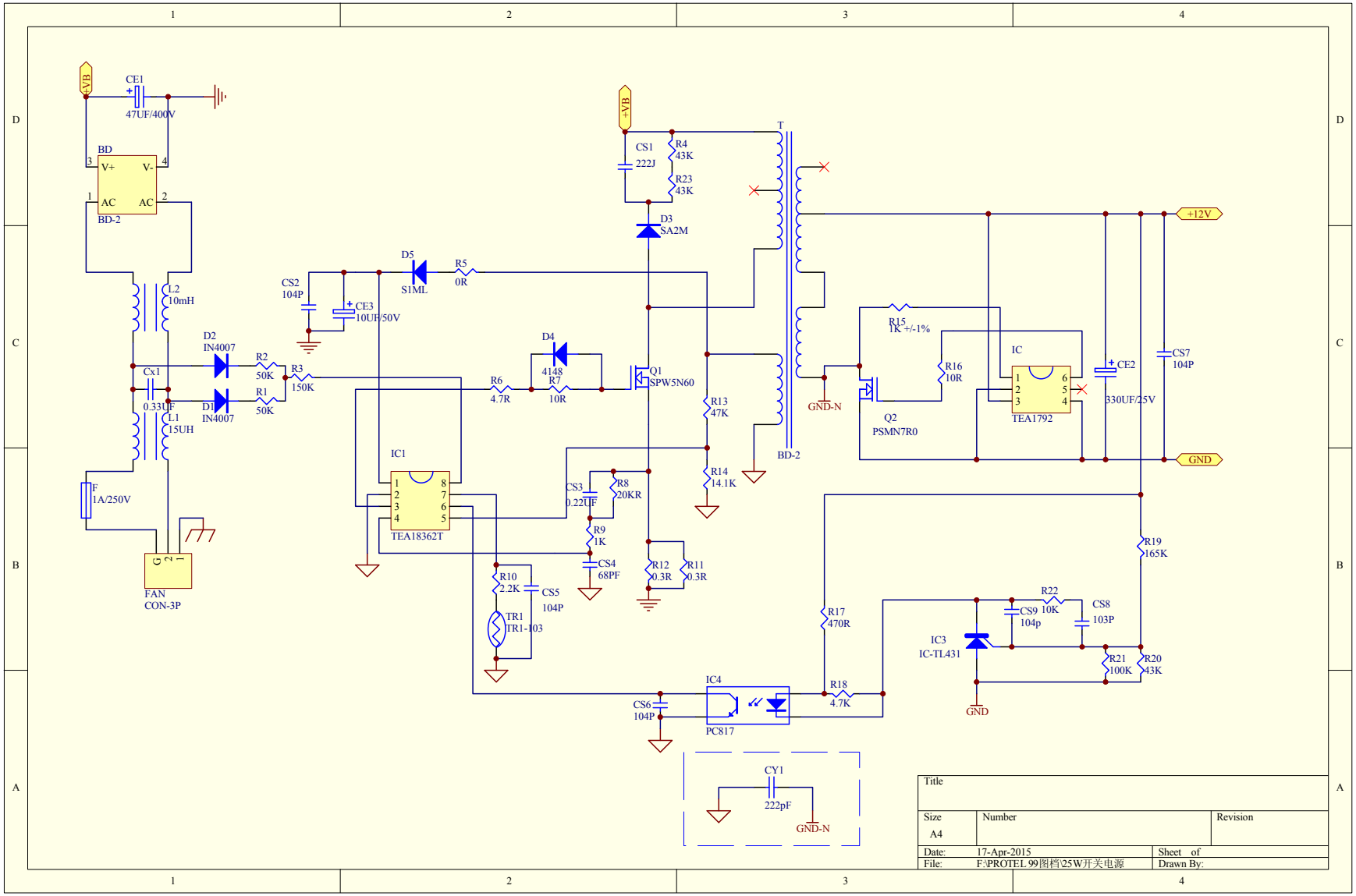
+VB
CE1
47UF/400V
BD
V+
V-
AC
AC
BD-2
L2
10mH
D2
IN4007
D1
IN4007
R2
50K
R1
50K
R3
150K
Cx1
0.33UF
L1
15UH
F
1A/250V
FAN
CON-3P
CS2
104P
CE3
10UF/50V
D5
S1ML
R5
0R
IC1
TEA18362T
R6
4.7R
D4
4148
R7
10R
Q1
SPW5N60
CS3
0.22UF
R8
20KR
R9
1K
CS4
68PF
R10
2.2K
CS5
104P
TR1
TR1-103
R12
0.3R
R11
0.3R
CS1
222J
R4
43K
R23
43K
D3
SA2M
R13
47K
R14
14.1K
T
BD-2
GND-N
R15
1K +/-1%
R16
10R
Q2
PSMN7R0
IC
TEA1792
CE2
330UF/25V
CS7
104P
+12V
GND
R19
165K
R17
470R
R18
4.7K
IC4
PC817
CS6
104P
CY1
222pF
GND-N
R22
10K
CS9
104p
CS8
103P
IC3
IC-TL431
R21
100K
R20
43K
GND
Title
Size
A4
Number
Revision
Date:
17-Apr-2015
Sheet of
File:
F:\PROTEL 99图档\25W开关电源
Drawn By: